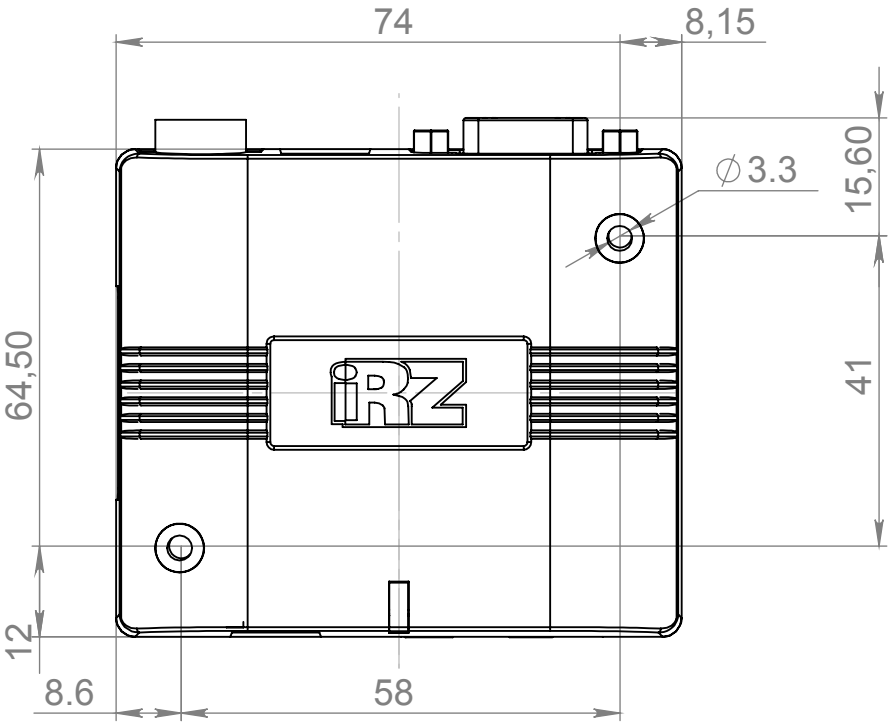
74
8,15
15,60
∅3.3
64,50
41
12
8.6
58

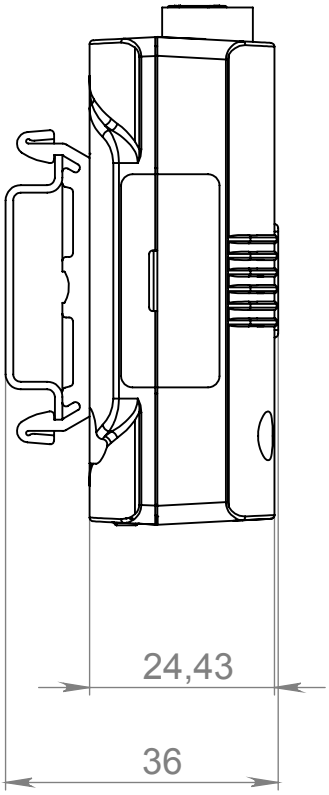
24,43
36